Item	Type	Min Qty.
Wetpour (m^2)	FFH 0.595m	18.13
Unit Fix (m^3)	1:2:4 Concrete	0.23
Surfacing Base (m^3)	MOT Type 1	1.81
Length of Edging (m)	Perimeter	15.96

ESTIMATED QUANTITIES ONLY

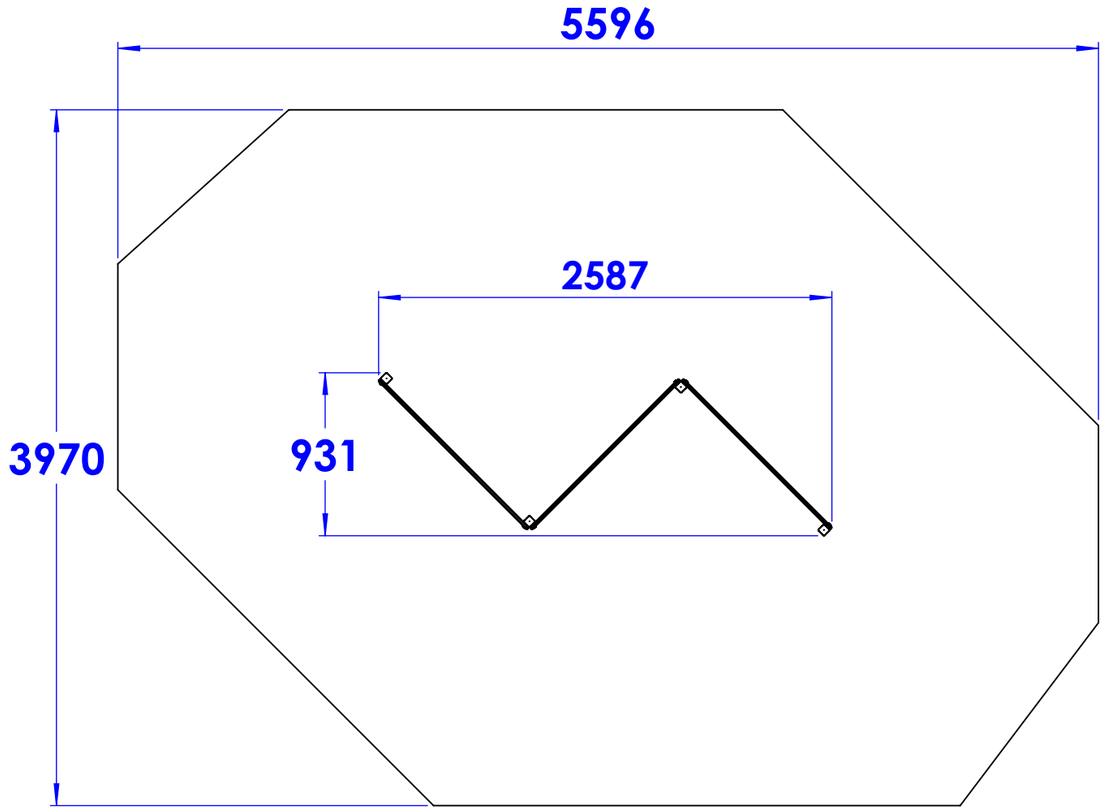

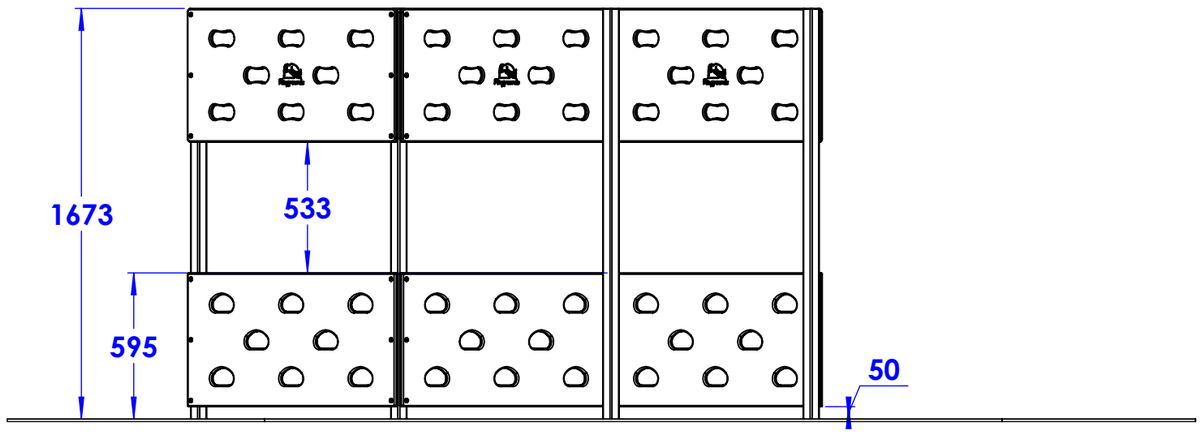

Drawing Status	Approved

GL Jones Playgrounds
Design
Manufacture
Installation

GL Jones Playground Ltd
Station Road, Bethesda
Gwynedd LL57 3NE
Tel: 01248 600372
Fax: 01248 602085

www.gljones-playgrounds.co.uk
info@gljones-playgrounds.co.uk

THIS DRAWING SHOULD NOT BE USED FOR INSTALLATION PURPOSES. FOR GUIDENCE ONLY

	NAME	DATE
LASTSAVE	nathan.williams	25/11/2025
DRAWN	N. Williams	21/11/2025

DO NOT SCALE DRAWING | REVISION 00

TITLE: **Split Traverse Climbing Wall Config 1**

MATERIAL: See Detail Drawing

DWG NO. **E026-005**

A3

©

Website